Micro-brewing learning and training program

(LdV Beer School)

Program izobraževanja v mikro-pivovarstvu
(projektno gradivo)

Beer styles

Raw materials

Brewhouse technology

- *mashing and mashing in*
- *lautering and wort boiling*
- *main fermentation and maturation*
- *filtration, filling and stabilization*

Fermentation 1/2

- The influence of fermentation conditions on beer flavor cannot be overemphasized. The central role of yeast metabolism in the production of flavor compounds has been well established. Yeast produces these compounds as by-products of the synthesis of compounds necessary for growth and metabolism. The relative concentrations of flavor compounds vary with cell growth patterns, which are dependent on processing conditions.
- To produce consistent beers, it is imperative to have consistent cell growth in each fermentation. Each yeast strain has its own characteristic response to processing conditions.

Fermentation 2/2

Main goals:

- To set the taste and flavor of beer
- To produce alcohol from sugars
- To stabilize beer by utilization amino-acids and peptides
- To clarify the wort by sedimentation and flotation

Vessels used for fermentation

- Open fermentation vessels - Older fermentors were generally open, relatively shallow tanks. A fermentation cellar often had several floors with 6–12 tanks per floor.
- Closed tanks - combi tanks, Asahi tanks used only for specific beers.
- CCT - closed vertical tanks with conical bottoms (cylindroconical tanks). The tanks could be used for fermentation and aging because the yeast can be removed from the cone, leaving the beer undisturbed in the tank.

Specific fermentation vessels

Burton Union fermentation 1/2

- This system of fermentation is associated with the Burton-on-Trent area and was devised for the production of pale ales with powdery, i.e., non-flocculent yeasts.
- Wort is collected and pitched in a collecting vessel and then transferred at the peak of fermentation (36 to 40 hours) to the set of Union vessels.
- These vessels are oak casks of capacity 7 hl arranged in two adjacent rows of 12 vessels beneath an inclined, cooled `top' trough. The individual casks contain cooling coils. At the top of each cask is a swan-neck pipe, which can discharge into the trough.

Specific fermentation vessels

Burton Union fermentation 2/2

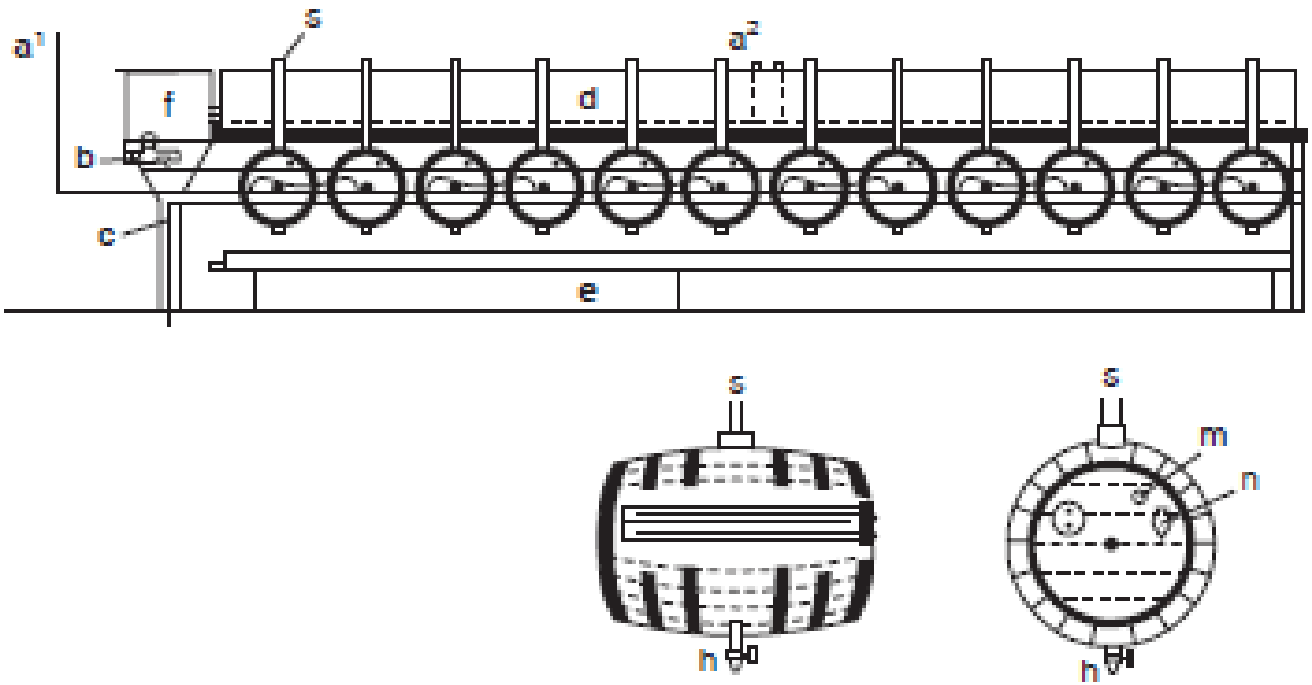

Fig. 14.9 Burton Union fermentation system (a^1) attemperator water (beer); (a^2) attemperator water (yeast); (b) side rod; (c) waste water; (d) top trough; (e) bottom trough; (f) feeder; (s) swan-necks; (h) bottom tap; (m) side tap; (n) sample tap (Hough *et al.*, 1982).

Specific fermentation vessels

Yorkshire square vessels 1/2

- were originally made of stone and then of slate and of very small capacity (50 hl). Modern Yorkshire squares are made of stainless steel and have capacities of up to 850 hl, to match the increased brewlength of the modern brewhouse.
- **Yorkshire squares** are characterized by having a lower compartment separated from the upper open portion by a gently sloping deck. The deck provides entry to the lower compartment by a series of pipes, known as organ pipes, and by one or two manholes with flanges around the rim. On the top of the deck is an outlet with a plug that is inserted to facilitate skimming the yeast.

Specific fermentation vessels

Yorkshire square vessels 2/2

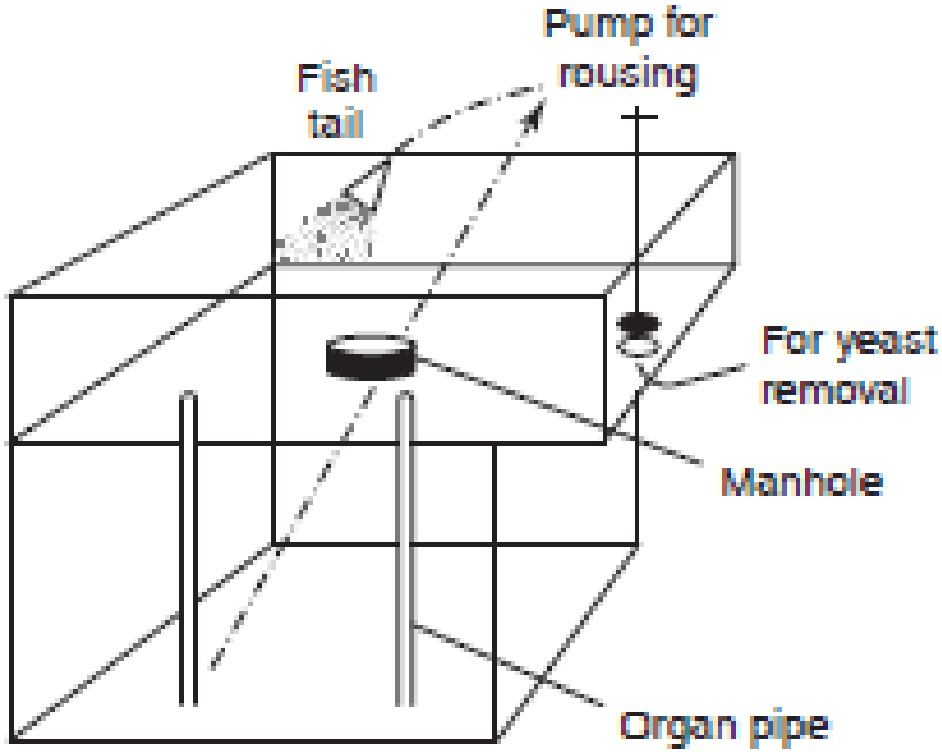

Fig. 14.8 Yorkshire square fermenting vessel (Hough *et al.*, 1982).

Common temperatures used for different yeast strains

- *Lager yeast* – pitching temp 6-10°C, fermentation temperature 8-14°C
- *Ale yeast* – pitching temp 15-30°C, fermentation temperature 18-25°C
- *Wheat yeast* – pitching temp 18-30°C, fermentation temperature 20-25°C
- *Spontaneous cultures* – no cooling of wort, slow decreasing of temperature to approx. 25°C and than directly to fermentation vessel

Measuring speed of fermentation

- By determining the specific gravity of the wort at time intervals one can follow the course of fermentation.
- The decline in the specific gravity is matched by the growth of the yeast as sugars are metabolized and ethanol produced.

Speed of fermentation

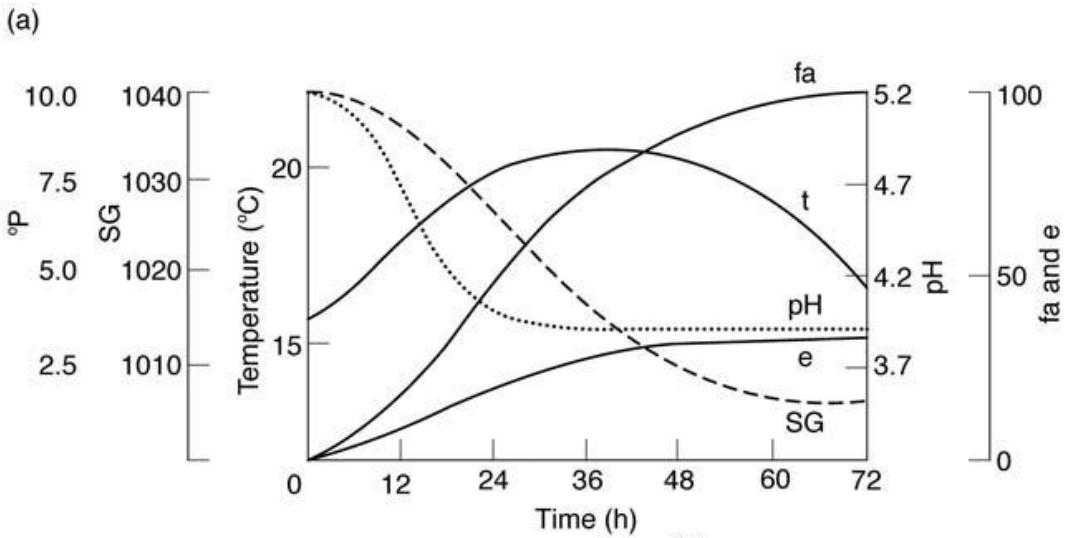

Time course of fermentation for ale (a) and lager (b) beers.
fa, level of fusel alcohols (g/l); e, level of esters (g/l); t, temperature °C.

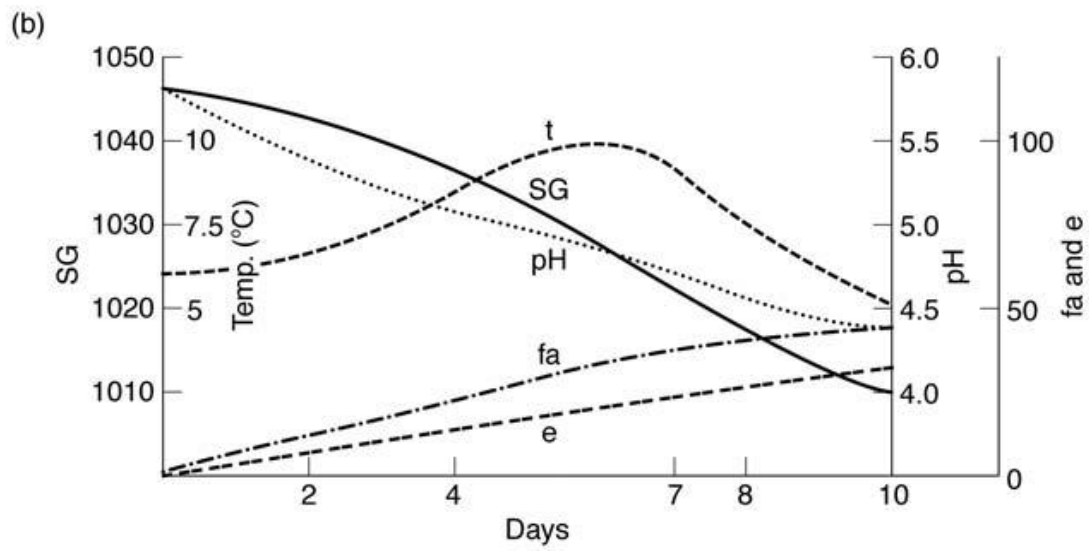

Maturation

- Beer, at the completion of primary fermentation is said to be 'green'. It contains little entrained carbon dioxide, it is hazy and its taste and aroma are inferior to beer that is ready for sale. Green beer must be matured.
- The process, also called “lagering“ for bottom fermented beers. There is used to be held the beer for several weeks or even months at maturation cellar.
- Traditionally, maturation involves a secondary fermentation and is effected by the small amount of yeast remaining in the beer when it is transferred from the fermenting vessel. This yeast can utilize fermentable carbohydrates remaining in the beer at the end of primary fermentation.

Changes in flavor

- Flavor maturation is generally considered the most significant outcome of aging. Successful flavor maturation has become more important as beers have become “lighter” in flavor.
- Several important groups of compounds have been identified as changing during the maturation of beer with consequent positive effect on beer flavour. The most important are: diketones (especially diacetyl), sulphur compounds, aldehydes, and volatile fatty acids.

Conditions of maturation

- ***Cold maturation*** – temp -3 – 0 °C, time 2 – 9 weeks
- ***Warm maturation*** – temp 0 – 5 °C, time 2 – 6 weeks
- ***Hot maturation*** – temp 10 – 20 °C, time 2 – 10 days
- ***„Hop torpedo“*** – circulation of beer throught hop cones, temp 3 – 20 °C, time 4 – 72 hours, used for dry hopping